Network Video Recorder

DEN401E Series

Key Features

- Support Ultra 265/H.265/H.264 video formats
- 4/8/16-channel input
- Third-party IP cameras supported with ONVIF conformance: Profile S, Profile G, Profile C, Profile Q, Profile A, Profile T
- Support 1-ch HDMI, 1-ch VGA, HDMI at up to 4K(3840x2160) resolution
- HDMI and VGA simultaneous output
- Up to 8 Megapixels resolution recording
- 1 SATA HDD up to 8 TB
- ANR technology to enhance the storage reliability when the network is disconnected
- Support cloud upgrade

Specifications

Model	DEN401-04E	DEN401-08E	DEN401-16E
Video/Audio Input			
IP Video Input	4-ch	8-ch	16-ch
Two-way Audio Input	1-ch, RCA		
Network			
Incoming Bandwidth	40Mbps	60Mbps	80Mbps
Outgoing Bandwidth	64Mbps	64Mbps	80Mbps
Remote Users	128		
Protocols	P2P, UPnP, NTP, DHCP, PPPoE		
Video/Audio Output			
HDMI/VGA Output	HDMI: 4K(3840x2160)/30Hz, 1920x1080p/60Hz, 1920x1080p/50Hz, 1600x1200/60Hz, 1280x1024/60Hz, 1280x720/60Hz, 1024x768/60Hz VGA: 1920x1080p/60Hz, 1920x1080p/50Hz, 1600x1200/60Hz, 1280x1024/60Hz, 1280x720/60Hz, 1024x768/60Hz		
Recording Resolution	8MP/6MP/5MP/4MP/3MP/1080p/960p/720p/D1/2CIF/CIF		
Audio Output	1-ch, RCA		
Synchronous Playback	4-ch	8-ch	16-ch
Corridor Mode Screen	3/4	3/4/5/7/9	
Decoding			
Decoding format	Ultra 265, H.265, H.264		
Live view/Playback	8MP/6MP/5MP/4MP/3MP/1080p/960p/720p/D1/2CIF/CIF		
Capability	1 x 4K@30, 2 x 4MP@30, 4 x 1080p@30, 8 x 720p@30, 16 x D1		
Hard Disk			
SATA	1 SATA interface		
Capacity	up to 8TB for each disk		
Smart			
VCA Detection	Face detection, Intrusion detection, Cross line detection, Audio detection, Defocus detection, Scene change detection, Auto tracking		
VCA Search	Face search, Behavior search		
Statistical Analysis	People counting		
External Interface			
Network Interface	1 RJ-45 10M/100M Self-adaptive Ethernet Interface		
USB Interface	Rear panel: 2 x USB2.0, Front panel: 1 x USB2.0		
Alarm In	4-ch		
Alarm Out	1-ch		
General			
Power Supply	12V DC Power Consumption: ≤ 8 W(without HDD)		
Working Environment	-10°C ~ + 55°C (+14°F ~ +131°F), Humidity ≤ 90% RH(non-condensing)		
Dimensions(W×D×H)	260mm×240mm×44mm (10.2"×9.4" ×1.7")		
Weight (without HDD)	≤ 1.12 Kg (2.47 lb)		

Dimensions

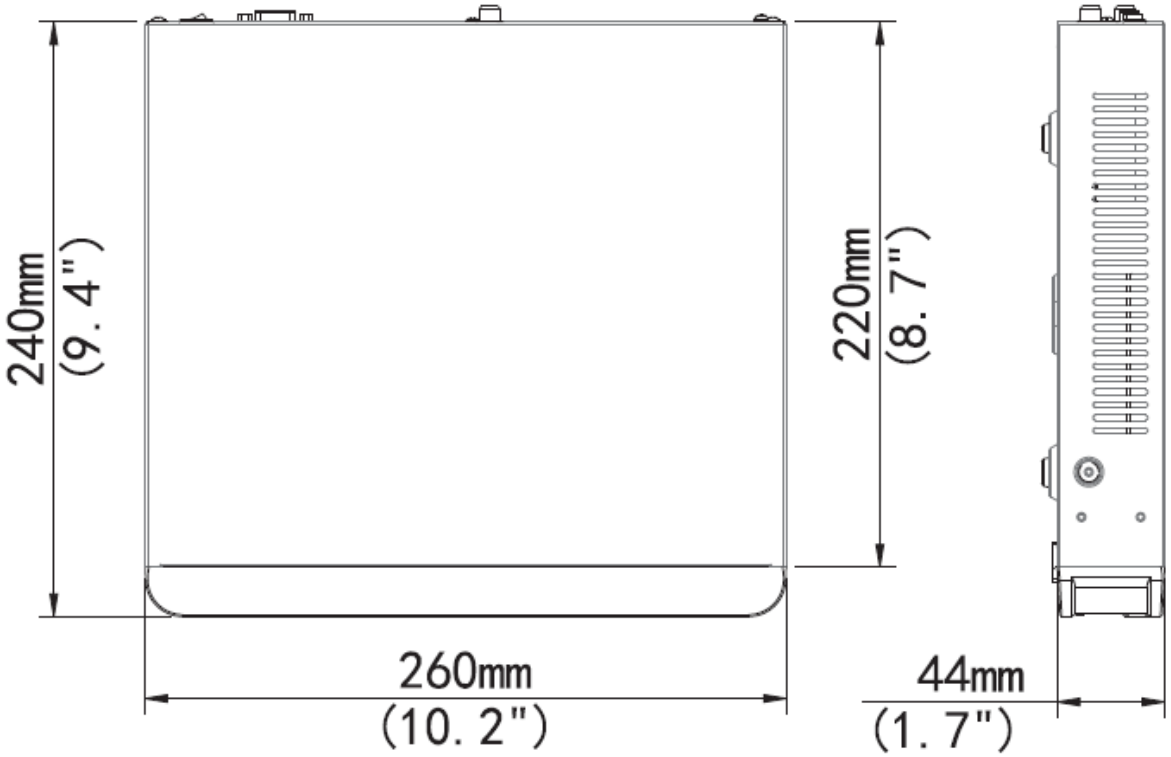
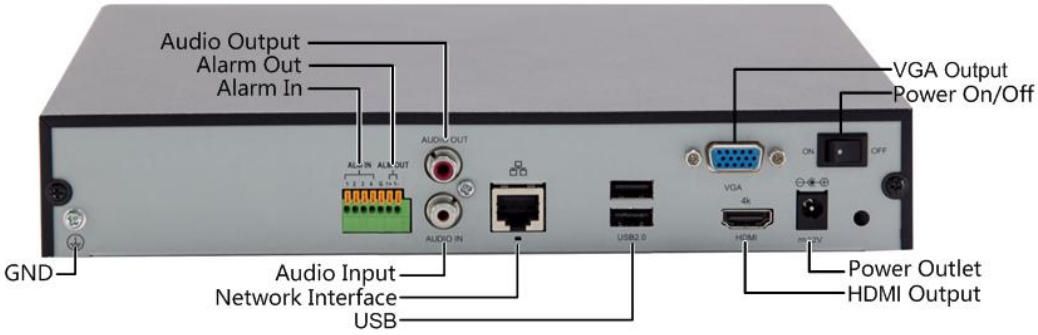
Rear Panel